1pcs 5" 125mm Diamond Turbo Rim Concave Curved Dry Wet Cutting Disc Granite Marble Circular Saw for Manufacturer

Feature:

125mm Turbo Rim Dry Wet Cutting Disc

1.Accept small quantity orders

2.Long life and stable performance

3.Produce all kinds of specifications

4.Any package according to customers

5.Good cutting result and high efficiency

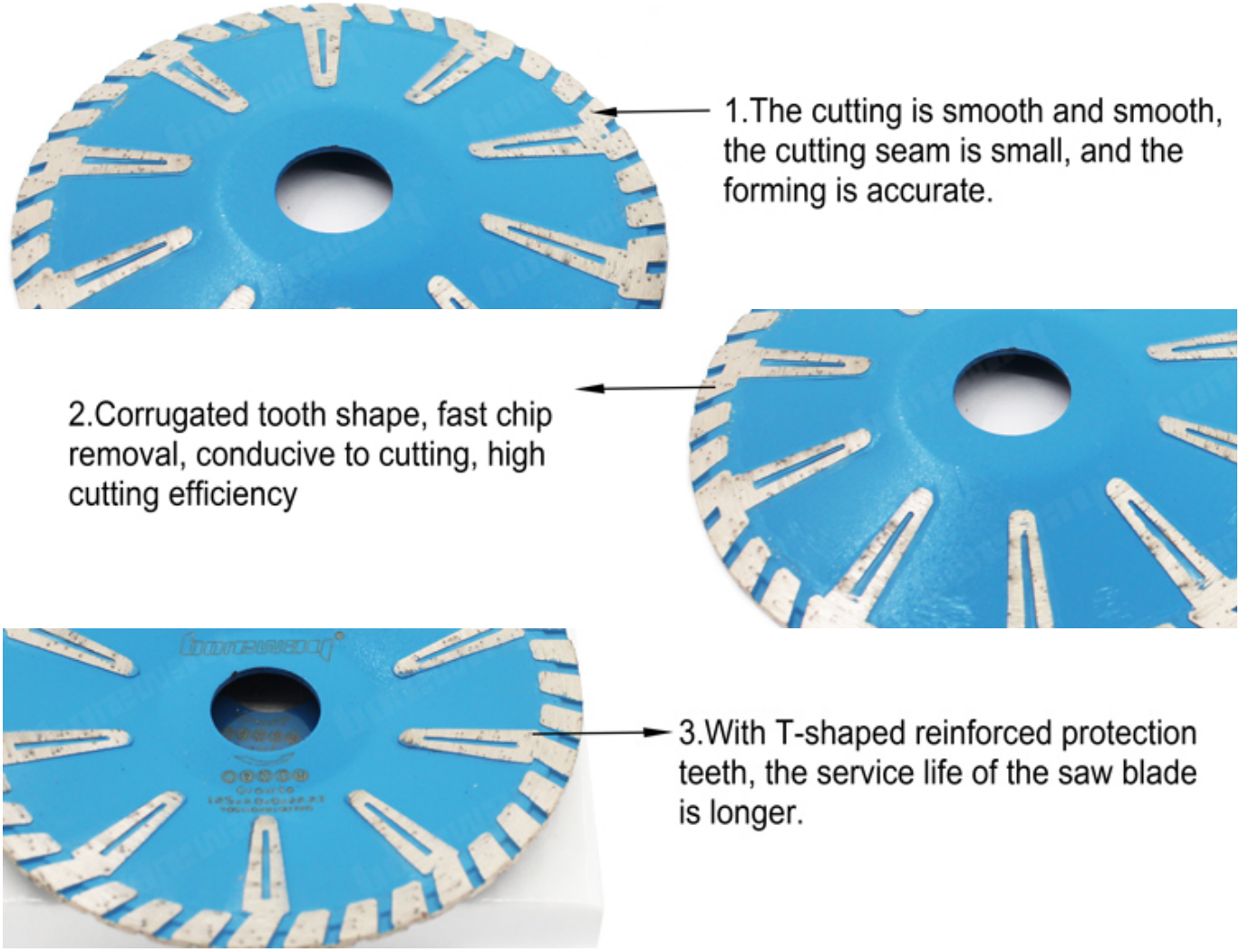

Specification:

The following are normal specifications **125mm Turbo Rim Dry Wet Cutting Disc:**

Diameter	Bore (mm)	Segment Height

105mm(4 inch)	20mm/22.23mm	8mm
125mm(5 inch)		
150mm(6 inch)		
180mm(7 inch)		

The above specifications is only for reference, other specifications may be available as per customer's demand.

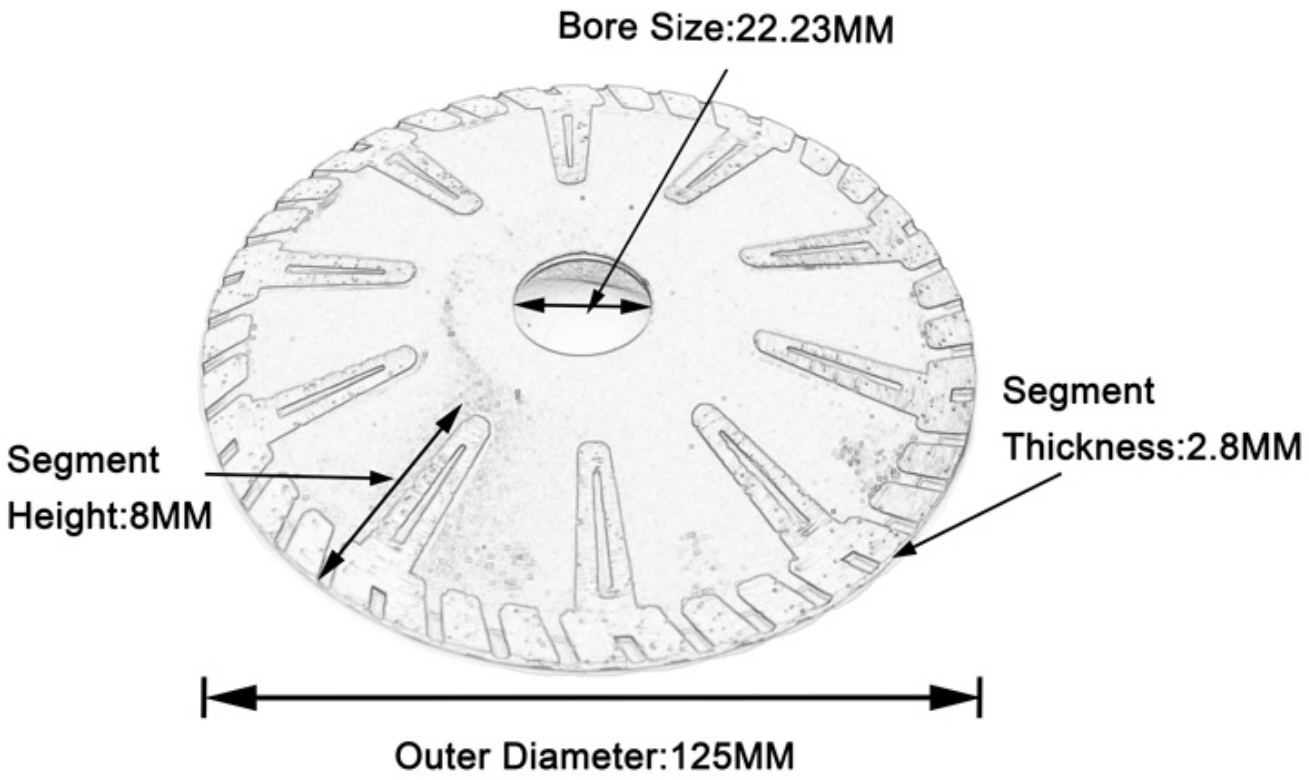

Advantage:

125mm Turbo Rim Dry Wet Cutting Disc

1. Wet cutting or wet cuttingturbo help to cooling and bring the dust out, so moreefficient fast and stable in cul

2. Hot-pressed sintered blades provide long working lifements which can cutting multi materials

3. Fast cutting andow wasteHard material, granite marble concrete brick ect.

4. Professional quality, very fast cutting Blade intended for cutting on granite concrete Accurate and smooth precision cuts

Factory=Quality Control=Competitive Price=Own technology=OEM

Our factory use original high grade diamond

pk

Other factory mix second diamond selected from waste segment

Our blade cutting effect

pk

Other supplier blade cutting effect

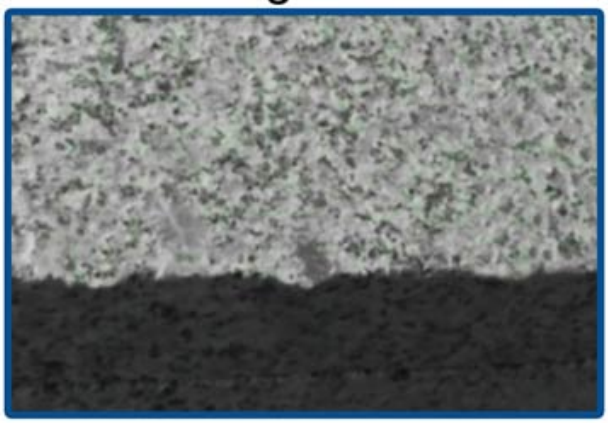

Description:

125mm Turbo Rim Dry Wet Cutting Disc on both sides improve cured cutting, minor grinding and help prevent binding for cured cutting in Granite and Marble.

Segment: 8 mm
Weight: 22.23 mm
Size: Inch
Blade Material: Steel

Out D25 amenter: Cut Cut Typing Blade Sinter Mr (Hot Press)

Good Cutting Reference Pseudo-Tuarned. High Efficiency

Stone, Granite, Tiles, Marbles; Concrete, Etc.

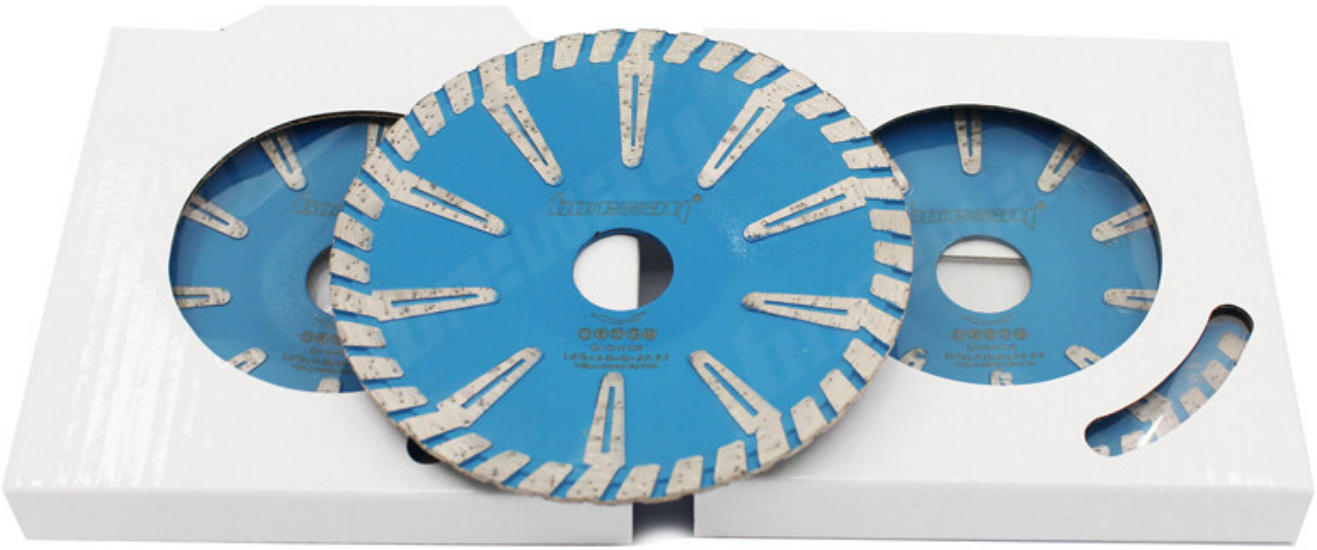

Application:

125mm Turbo Rim Dry Wet Cutting Disc are designed for cutting granite sinks, counter tops, granite, marble, stone, masonry, hard brick etc contruction materials.

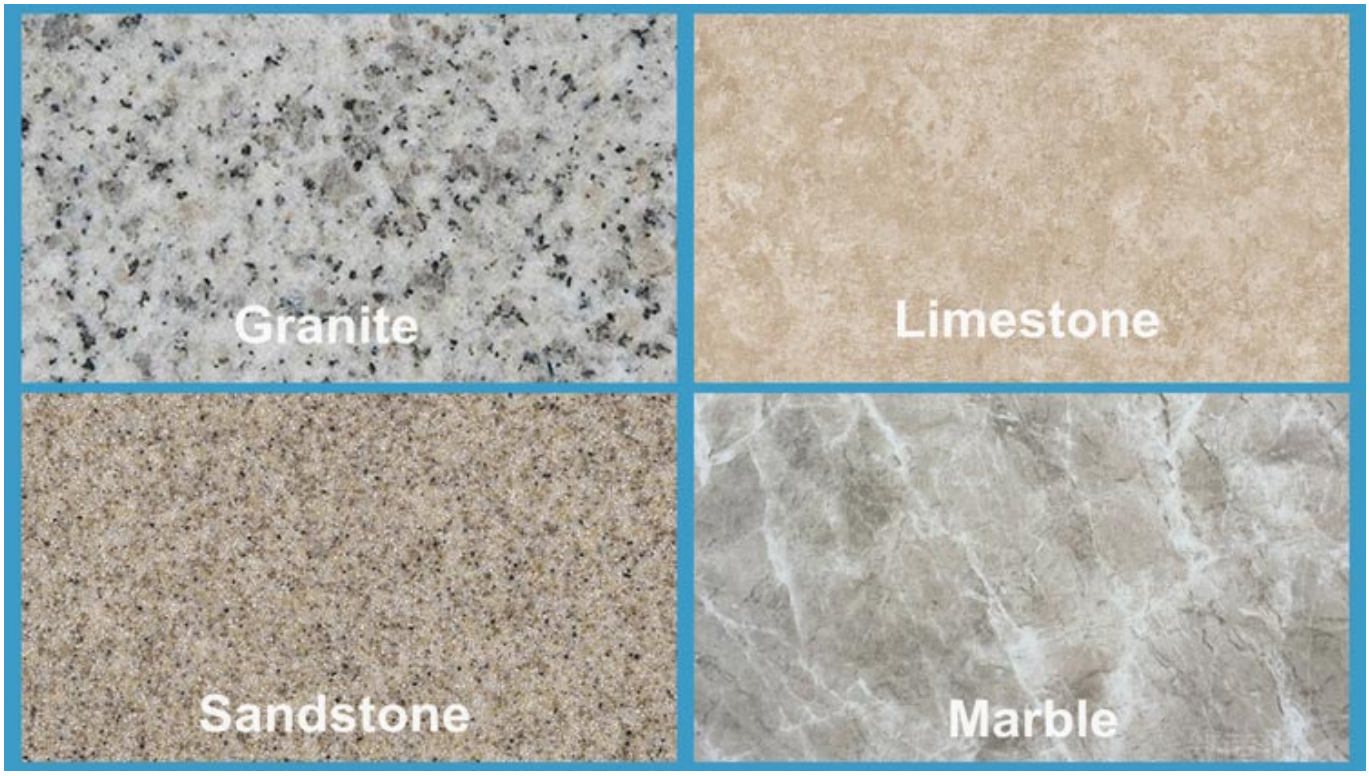

Attention when use:

1. Before saw blade installed, pollutions adhering between saw blade and flange shall be removed,
 when installing saw blade, the marked direction shall be kept consistent with the rotating direction of electric tools, and flange shall be fastened by spanner attached to electric tools.

2. Do not use any saw blade that has been deformed for being pressed of crashed.

3. When operating, operator must wear safety helmet, safety footwear and goggles, protective glove,additionally, if necessary operator must use earplug, mask and so on

4. Electric tools shall have protective cover.

Applications Machine:

125mm Turbo Rim Dry Wet Cutting Disc for all kinds of manual cutting machines or angle grinders.

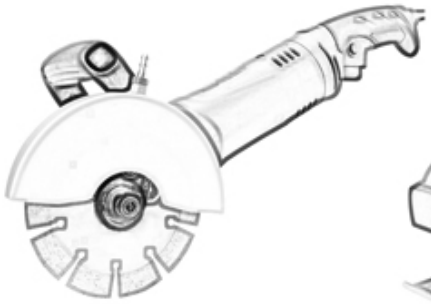

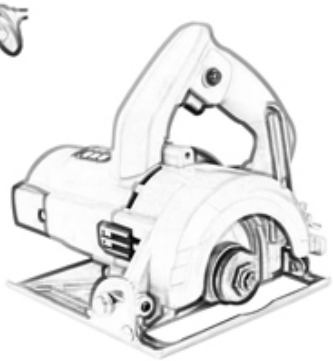

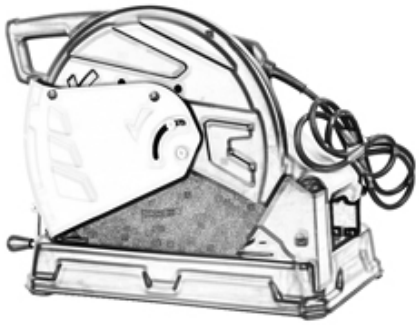

Angle Grinders Machine

Manual Cutting Machine

Related Products:

1000mm Wet Use Diamond Segment

circular Saw Blade Segments for Block Stone

About Us:

Packing Delivery:

PS:

1.Tools packing in carton cases

2.By Air/Sea for batch goods, Airport/Port receiving

3.Less than 45kg, generally delivery by express(Door to Door

4.When tools are in large quantities, they are packing in wooden cases

Our service:

1. Low order quantity: It can meet the test order you need.

2. Fast delivery: We get great discounts from freight forwarders.

3. OEM Acceptable: We can produce according to your samples or drawings.

4. Good quality: We have a strict quality control system. Has a good reputation in the market.

5. Good service: We regard our customers as God with a high degree of professionalism and enthusiasm.

FAQ:

1. If we want to order your product, how do we know your quality?
You can test with a small order, and then you will know the quality. Nowadays, many people in the world use Chinese products because of their high quality and high cost performance. We are a professional diamond tool manufacturer with more than 8 years of manufacturing

experience.

2. Can you provide samples for free?

We do not provide free samples. Based on years of experience, we believe that customers will want them because of their reliable quality. By purchasing samples, we will cherish and appreciate them and make them get more. We are ready to offer our potential customers a special discount on samples. It's very important that you give us feedback, and we will appreciate it.

3. Does your company accept customization?

Of course, we accept customization. Including different colors, cutting objects, etc. We can also tag your own label and company brand. If you want us to make any new products for you, just send your products to us. Whether it's drawings or samples, we have the ability to produce the same products. We will not sell these products to others, only customers can get permission.