□□□□**Fickert140Mm**□□□□

Fickert Grinding Pads

Electricity saving: its sharpness can reduce the stress of grinding head, thereby reduce machine's abrasion.

- Factory Price
- Preferred Materials
- Long Life
- Excellent Gloss
- Smooth Grinding
- Stable Operation

Specification

Model	Description	Grit
BW-DF-M140	Metal Fickert	36#/46#/60#/80#/100#/120#/140#/180#/240#/320#
BW-DF-M170	Metal Fickert	36#/46#/60#/80#/100#/120#/140#/180#/240#/320#

Use

Application

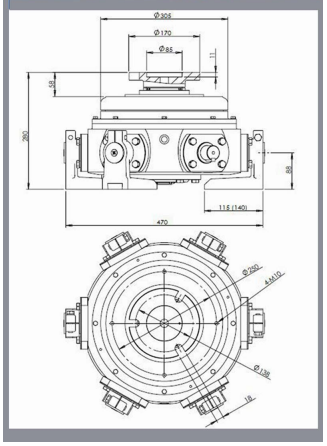

□□

□□□□□□□□□□**140MM**□□□□□□□□□ □□□□□□□□□□□

□□□□□□

PS□

1.□□□□□□□□□□□□□□□□

2.□□□□□□□□□□□/□□□□□/□□□□□□□□

3.45kg□□□□□□□□□□□□□□□□□□□□□

4.□□□□□□□□□□□□□□□□□□□

- For sample or small orders, products could be sent by express, TNT, DHL, UPS, FedEx, EMS etc.
- For large orders, shipping by sea or air is recommended. By our long-term cooperate agent or your appointed forward.
- By sea, port of loading: Shanghai, Ningbo, Xiamen, Qingdao etc.

□□□□□□□□

DHL□UPS□FedEx□TNT□EMS□□□□□□□

□□□□□□□

Fujian Nanan boreway® Machinery Co.,Ltd.

No.605 Huahui Center□Shuitou Town 362342 Quanzhou□Fujian□China

TEL□ □+86□595-86990206 / □□□□□□□+86□595-86990220

□□□□/ **WhatsApp / Wechat□□**+ 86□ 18650679939

E□□□□ boreway@boreway.com

□□□□□□