[illegible]

[illegible]

[illegible]

[illegible]

1.[illegible]

2.[illegible]

3.[illegible]

4.[illegible]

[illegible]

[illegible] [illegible]

[illegible]	[illegible]	[illegible]	[illegible]
12[illegible]300mm	40×3.6×10	2.2/2.0	21 PC

[illegible]

[illegible]

[illegible]

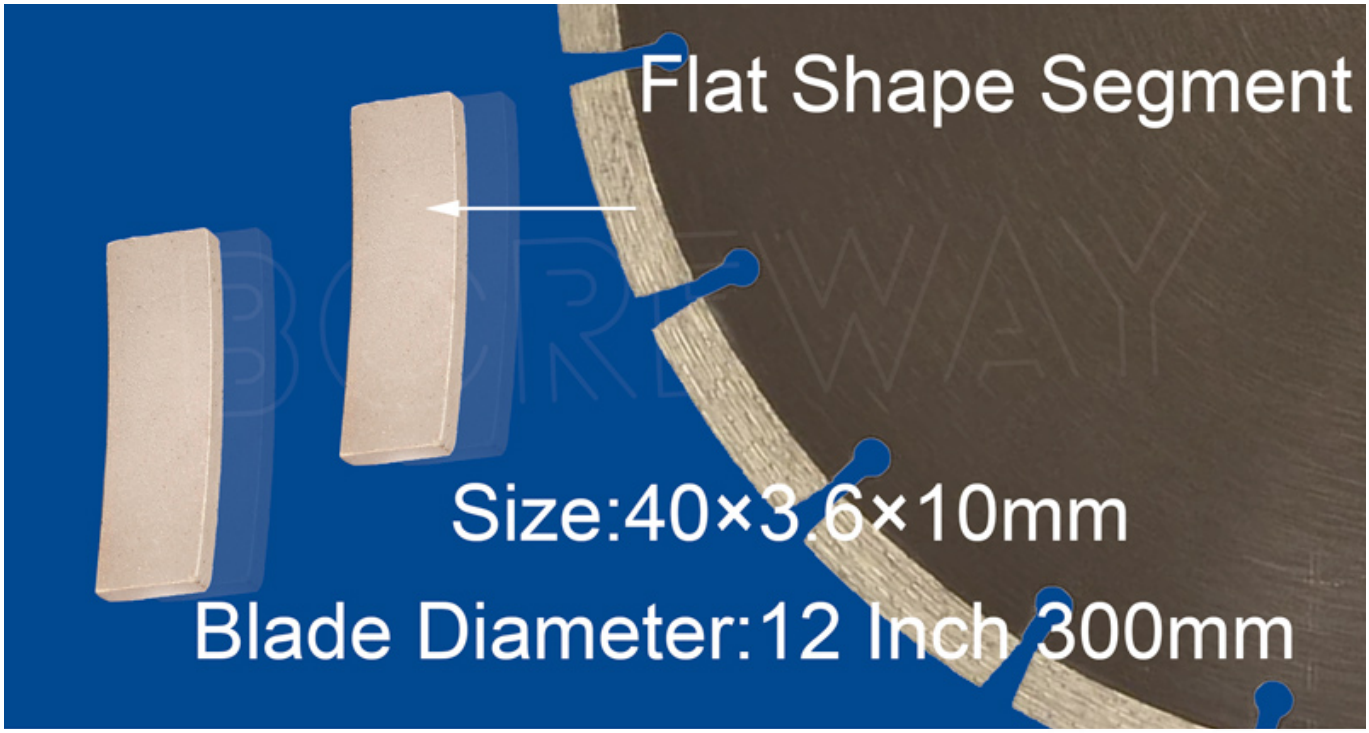
Flat Shape Segment
Size:40×3.6×10mm
Blade Diameter:12 Inch 300mm

□□□

□□□□□□□□□□□□□□□□□

□□

□□

[illegible]

1.[illegible]

[illegible]10[illegible]Boreway[illegible]

2.[illegible]

[illegible]

3.[illegible]

[illegible]Messege[illegible]24[illegible]Boreway[illegible]OEM/ODM[illegible] OEM/ODM[illegible]

□□□□□□□

Fujian Nanan boreway Machinery Co.,Ltd.

No.605 Huahui Center□Shuitou Town 362342 Quanzhou, Fujian, China

Tel□ □+86□595-86990206 / □□□□□□□+86□595-86990220

□□□□ / **WhatsApp / WECHAT□□**+ 86□ 18650679939

E□□□□ boreway@boreway.com

Lyon Chang