[illegible]

[illegible]

[illegible]

[illegible]

1.[illegible]

2.[illegible]

3.[illegible]

4.[illegible]

[illegible]

[illegible]

[illegible]

[illegible]

[illegible]

[illegible]

[illegible]

[illegible]fickerts[illegible]

Polishing heads parameter

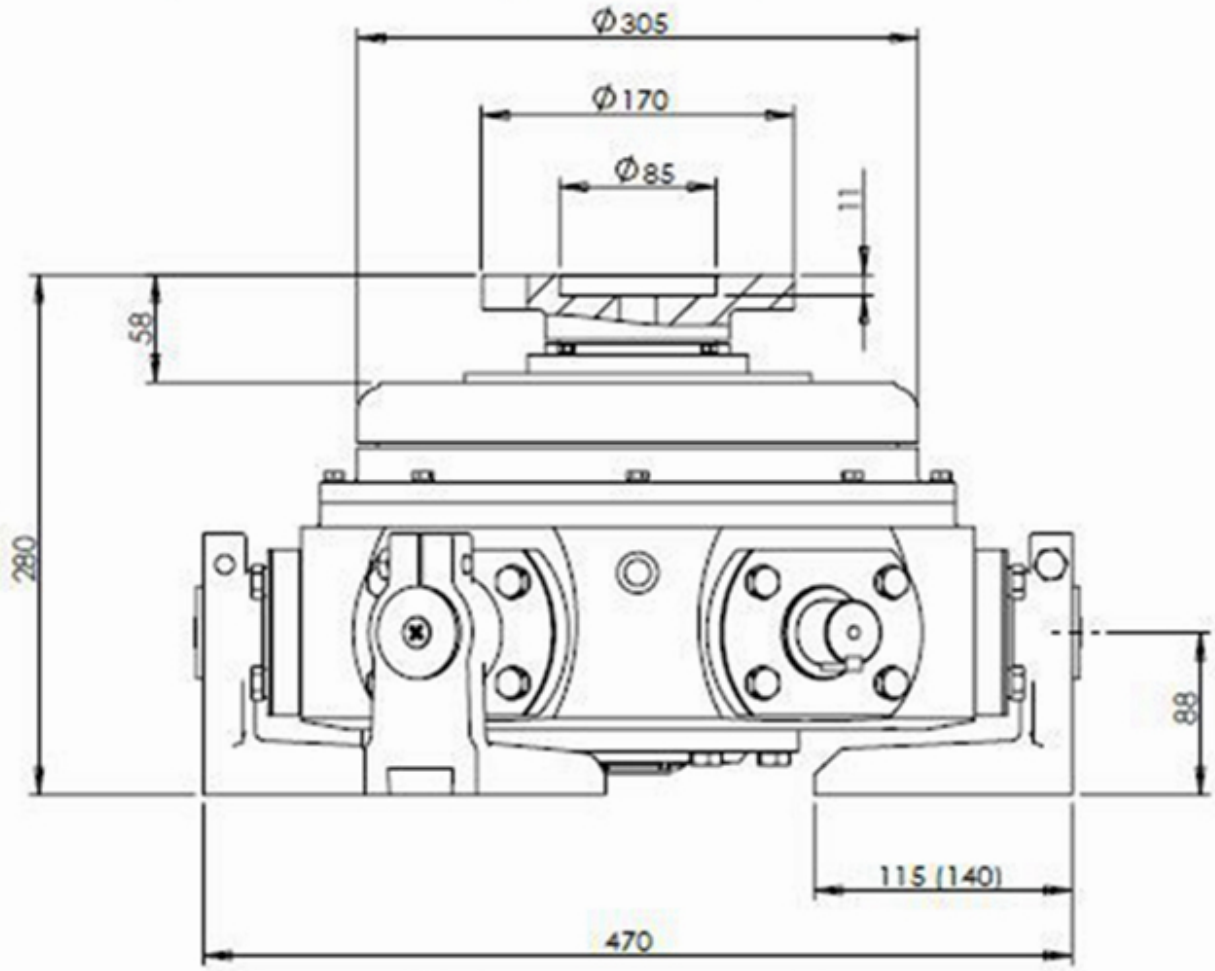

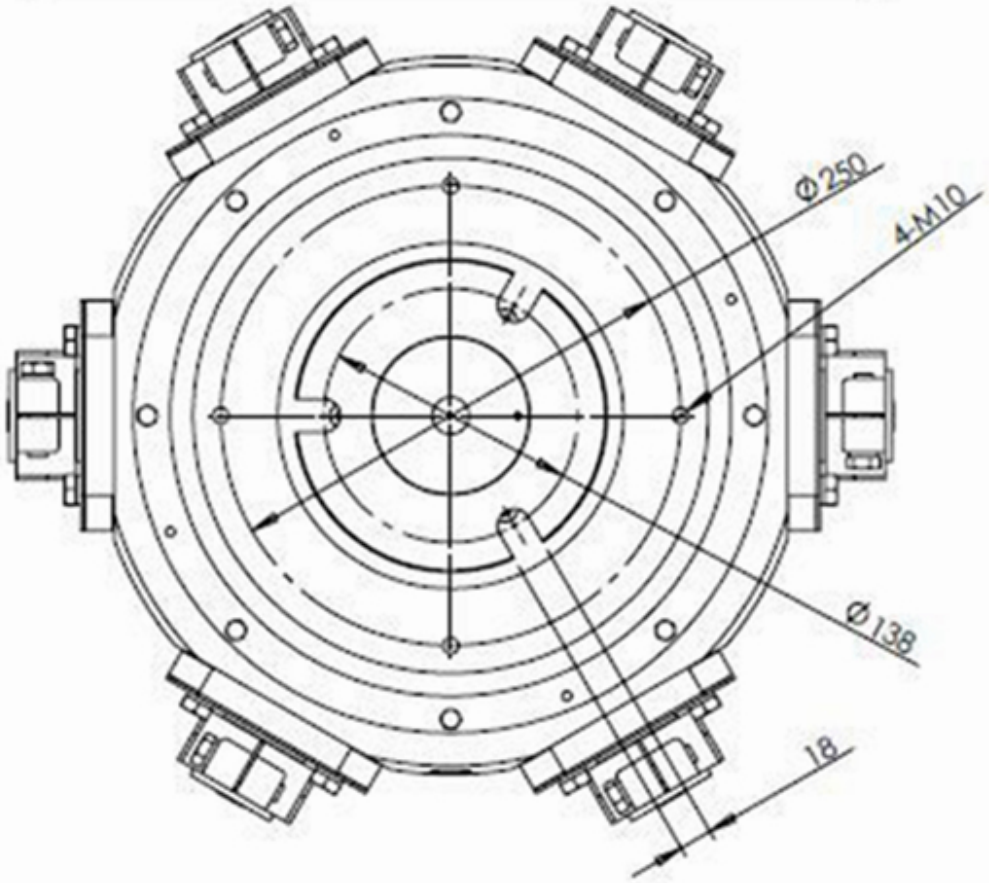

boneway®

Applicabe machines

boreway®

Applicable materials

boreway
Applicable materials
Granite
Marble
Vitrified brick
Quartz
Ceramic
microcrystal stone

□□□

1.□□□□□□□□□□□□□□□□□□□□□□□□□□□□□

2.□□□□□□□□□□□□□□□□□

3.□□□□□□□□□□□□□□□□□□□□□□□□□□□□□□□□□□□

□□□□□

□□□□□□□□□□□□□□□□

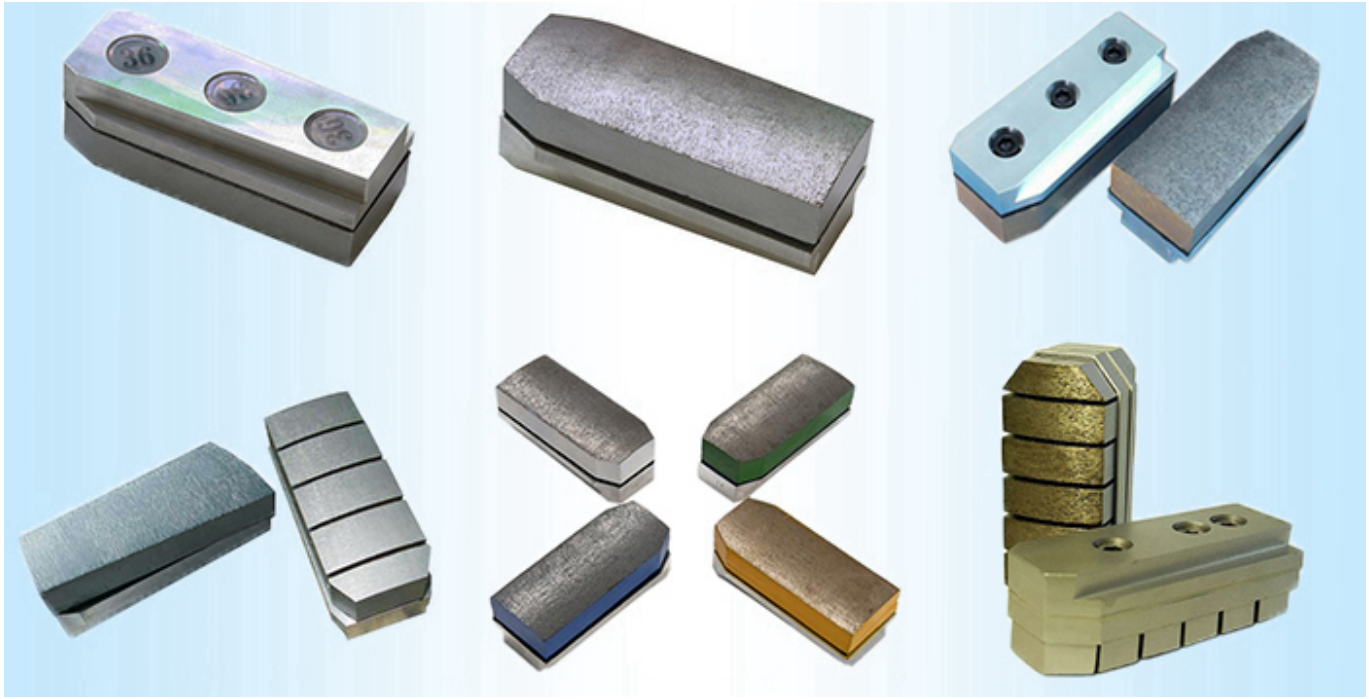

□□□□□□□□□□□□□□□□

□□□□□&□□□

□□□□□□□□□□

EDAX
D8

第 9135152 号

商标注册证

boreway

核定使用商品(第7类)

陶瓷工业用机器设备（包括建筑用陶瓷机械）；雕刻机；石材切割机；磨石（机器部件）；高压洗涤机；电焊枪（机器）；电动清洁机械和设备；压力机；切削工具（包括机械刀片）；抛光机器和设备（电动的）（截止）

注 册 人 福建省南安博威机械有限公司

注册地址 福建省南安市水头镇鸿星街

注册有效期限 自公元 2012 年 02 月 28 日 至 2022 年 02 月 27

局长签发 许瑞春

中华人民共和国国家工商行政管理总局 商标局

Alibaba.com Global trade starts here.

CREDIT CHECKED
by ALIBABA FINANCIAL

This supplier has been Credit Checked by Alibaba Financial:

Lei Zhang from Fujian Nanan Boreway Machinery Co., Limited

The credit check validity period: 2015-10-19 to 2016-10-18

This company has passed a financial assessment (including a credit check) conducted by Alibaba Financial. The scope of Alibaba's financial assessment of suppliers includes, but is not limited to: People's Bank of China credit archives, business data, Alibaba network behavioral data, corporate and personal balance sheets, court enforcement records.

Please note: Alibaba Financial provides credit check to online merchants but shall not be a party or bear any responsibility in case of any dispute thereof.

About Alibaba Financial

Alibaba Financial aims to serve online businesses by providing comprehensive and professional financial services. By utilizing field investigation, third-party data and online behavior data, we are able to provide credit investigations and loans to enter-prises on our platforms, such as alibaba.com, taobao.com and tmall.com. We also offer insurance and E-commerce platform financial services.
Alibaba Financial devotes itself to enabling online businesses by making credit available to drive wealth creation. Alibaba Financial is the first choice for online financial services.

□□□□

□□□□□□□

Fujian Nanan boreway Machinery Co.,Ltd.

Chois Dong
boreway05@boreway.net
+86-18120033767
Chois Dong
+86-18120033767
+86-595-86990220
+86-18120033767
+86-595-86990206
http://www.diamondtools.top
www.boreway.com
Huahui Center 605, Shuitou Town,Quanzhou, Fujian, China