[illegible]

[illegible][illegible]6,000[illegible]7,000 rpm[illegible]600[illegible]800 mm / min[illegible]

[illegible]

[illegible]

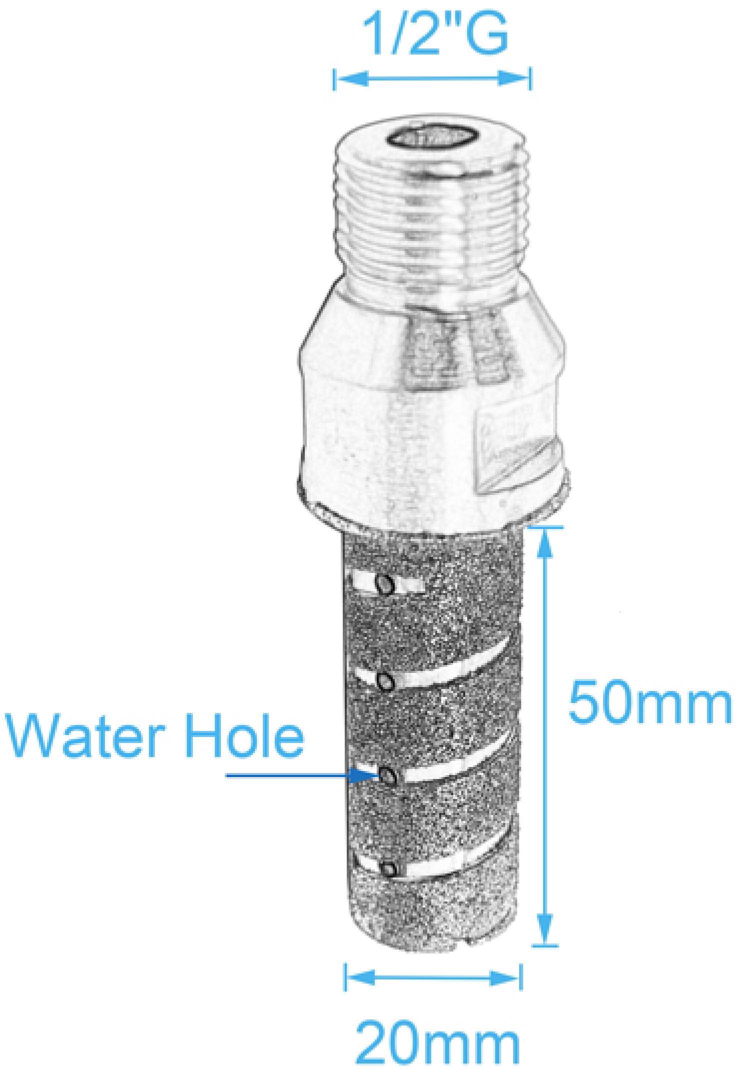

□□□□□

□□□ □□□□□□□□□□□□□□□□□

□□□□□□□	30/40□
□□□□□□□□□	50MM
□□□	20MM
□□□	1/2 "G
□□□□	□□□□□□□□
□□□	□□□□□
□□□□□□□□	□□□□□□□□□□□□
□□□□	□□□□

□□□□□□ □□□□□□□□□□□□□□□□□□ □□□□□□□□□□□□□□□□□□□□□□□□□□

□□□

1□□□□□□□□□□□□□□
2□□□□□□□□□□□
3□□□□□□□□□□□□□□□□□

4[illegible]

[illegible]

[illegible] CNC[illegible]

[illegible]
1.[illegible]
2.[illegible]
3.[illegible]
4.[illegible]
5.[illegible]
6.[illegible]

[illegible]

□□□□□□□□

1.□□□□□□□□□□□□□□□□□□□□□□□

2.2□□□□□□□□□□□□□□□□□□□□□□□

3. OEM□□□□□□□□□□□□□□□□□□□□

4.□□□□□□□□□□□□□□□□□□□□□□□□□□□□□□□□□□□

5□□□□□□□□□□□□□□□□□□□□□□□□□□□□□□□□□□□□□

□□□□□□□
DHL□UPS□FedEx□TNT□EMS□□□□□□□□□□□
□□□□□□□□□□□□□□□□□□□□□□□□□□□□□□□□□Exwork□FOB□CNF□CIF□□□□□□□□□□□□□□□□□□□
□□□□□

- For sample or small orders, products could be sent by express, TNT, DHL, UPS, FedEx, EMS etc.
- For large orders, shipping by sea or air is recommended. By our long-term cooperate agent or your appointed forward.
- By sea, port of loading: Shanghai, Ningbo, Xiamen, Qingdao etc.

□□□□□□□

1.□□□□□□

TEL□ □+86□595-86990206 /□□□□□□□□+86□595-86990220

□□□□/ **WhatsApp / Wechat**□□+ 86□ 18650679939

E□□□□ **boreway@boreway.com**

Lyon Chang