description

□□□□140mm□170mm

□□□□□□□□□□□□□□□□□□□□□

□□□□□36□/ 46□/ 60□/ 80□/ 100□/ 120□/ 140□/ 180□/ 320□

□□□□□□□□□□□□□□□□□L140 / L170 □□□□□□□□□□□□□□□□□□□□

Fickert Grinding Pads

Electricity saving: its sharpness can reduce the stress of grinding head, thereby reduce machine's abrasion.

- Factory Price
- Preferred Materials
- Long Life
- Excellent Gloss
- Smooth Grinding
- Stable Operation

Specification

Model	Description	Grit
BW-DF-M140	Metal Fickert	36#/46#/60#/80#/100#/120#/140#/180#/240#/320#
BW-DF-M170	Metal Fickert	36#/46#/60#/80#/100#/120#/140#/180#/240#/320#

Use

Application

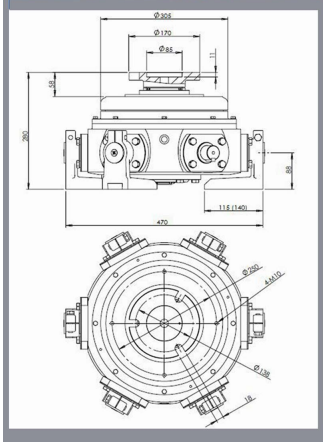

□□□□□

□□□	description	□□□□□□□□
BW-DF-M140	□□□	36□/ 46□/ 60□/ 80□/ 100□/ 120□/ 140□/ 180□/ 240□/ 320□
BW-DF-M170	□□□	36□/ 46□/ 60□/ 80□/ 100□/ 120□/ 140□/ 180□/ 240□/ 320□

□□□

1.□□□□□□□

□□□□□

□□□□□□□□□□□□□□□□□□□□□

□□□□□□□□□□

□□□□□□□□□□□□□□

PS□

1.□□□□□□□□□□□□□□□□□□□□

2.□□□□□□□□□□□/□□□□□□□□□/□

45kg□□□□□□□□Express□□□□□□□□□□□□□□

4.□□□□□□□□□□□□□□□□□□□□□□□□□□□□□□□□□□□□

- For sample or small orders, products could be sent by express, TNT, DHL, UPS, FedEx, EMS etc.
- For large orders, shipping by sea or air is recommended. By our long-term cooperate agent or your appointed forward.
- By sea, port of loading: Shanghai, Ningbo, Xiamen, Qingdao etc.

□□□□□□□□

DHL□UPS□FedEx□TNT□EMS ETC□□□□□□□□□□
□□□□□□□□□□□□□exword□fob□cnf□□□□□□CIF□□□□□□□□□□□□□

□□□□□□□

Fujian Nanan boreway® Machinery Co.,Ltd.

No.605 Huahui Center□Shuitou Town 362342 Quanzhou, Fujian, China

Tel□ □+86□595-86990206 / □□□□□□□+86□595-86990220

□□□□/ **WhatsApp / WECHAT□□**+ 86□ 18650679939

E□□□□ boreway@boreway.com

Lyon Chang