□□□□□

□□□□2 x1 / 4 pcd + 1 x□□□

□□□□□□□□□□□□□□□□□□□□□□□□□□□□□

□□□□□□□□□□□□□□□□□□□

□□□	□□□	□□
2x1 / 4 pcd	□□□+ PCD	STI□□□□□

□□□□□□□□□□□□□□□□

□□□□□□□□□□□□□□□□□□□□□□□□□□

□□□PCD□□□□□□□□□□□□□□□□□□□□□□□□□□□□□□□□□□□□

□□□

□□□□□□□□□□□□□□1/4 PCD□□ □□□Sti□□□□□□□□

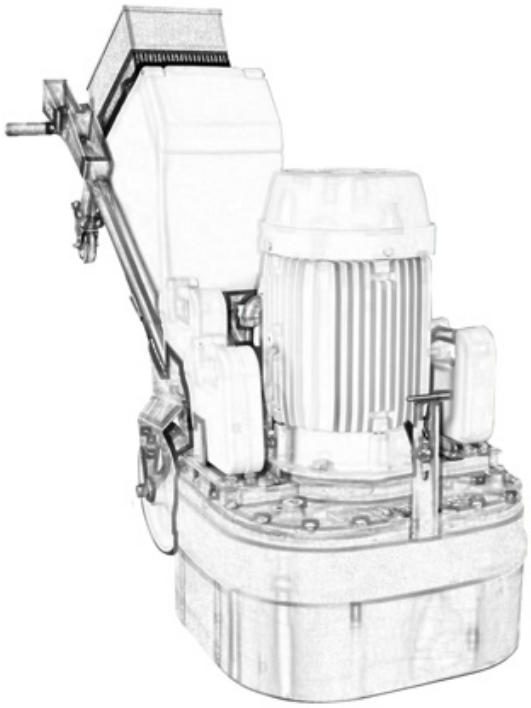

□□

□□□□□□□PCD□□□□□□□□□□□□□□

□□□□□□□□□□□□□PCD□□□□□□□□□□□□□□□□□□□□□

□□□□PCD□□□PCD□□□□□□□□□□□□□□□□□□

Trigular ScanMaskin Redi□□PCD□□□□□□□□□□□

□□□

□□□□□

□□□□□□

1.□□□□□□□□

2.□□/□□□□□□□□□/□□□□

3.□□45□□□□□□□□□□□□□□□□□□

4.□□□□□□□□□□□□□□□□□

- For sample or small orders, products could be sent by express, TNT, DHL, UPS, FedEx, EMS etc.
- For large orders, shipping by sea or air is recommended. By our long-term cooperate agent or your appointed forward.
- By sea, port of loading: Shanghai, Ningbo, Xiamen, Qingdao etc.

□□□□□□

1.□□□□□□□□□□□□□□□□□□□□□□

2□ □□□□□□□□□□□□□□□□□□□□□□

3. OEM□□□□□□□□□□□□□□□□□□□□□□

4.□□□□□□□□□□□□□□□□□□□□□□□□□□□□□□□□□□

5□ □□□□□□□□□□□□□□□□□□□□□□

□□□□□

1.□□□□□□□□□□□□□□□□□□□

□□□
□□□□□DHL□UPS□FedEx□TNT□EMS□
□□□□□□□□□□□□□□□□□□FOB□CNF□CIF□□□□□□□□□□□□□□□□□□□□□□

□□□□□

Fujian Nanan boreway Machinery Co.,Ltd.

Shuatou Town 362342 Quanzhou, Fujian, China□□□□□3605□

□□□ □+86□595-86990206 / □□□□+86□595-86990220

□□/ **WhatsApp** /□□□□+ 86□ 18650679939.

□□□□□ **boreway@boreway.com.**

Lyon Chang